Detail 514-1 — Utility Crossings

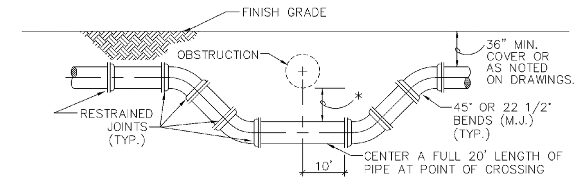

SPECIAL UTILITY CROSSING – FITTING TYPE

* 12" MINIMUM CLEARANCE REQUIRED FOR PRESSURE TYPE SANITARY SEWER, WASTEWATER OR STORMWATER FORCE MAIN OR REUSE WATER MAIN CROSSINGS. IF MINIMUM CLEARANCE CANNOT BE OBTAINED, REFER TO "PROTECTION OF POTABLE WATER SUPPLY" FOR WATER MAIN CROSSINGS. SEE NOTE 2(B), ON STANDARD NO. 514-3

6" MINIMUM CLEARANCE REQUIRED FOR WATER AND STORMWATER, SEWER MAIN CROSSINGS. SEE NOTE 2(A), ON STANDARD NO. 514-3

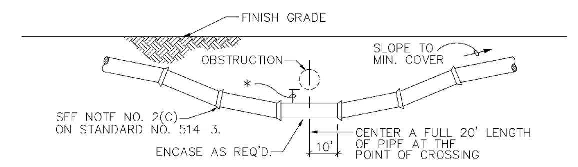

STANDARD UTILITY CROSSING – DEFLECTION TYPE

NOTES:
1. THE DEFLECTION TYPE CROSSING SHALL BE USED WHEREVER POSSIBLE. ONLY UNDER SPECIFIC ORDERS BY THE ENGINEER SHALL THE FITTING TYPE CROSSIING BE ALLOWED.
2. CONSTRUCT STANDARD CROSSING USING NO MORE THAN 75% OF MANUFACTURERS' MAXIMUM JOINT DEFLECTION.
3. FOR POTABLE WATER MAINS, REFER TO "PROTECTION OF POTABLE WATER SUPPLY".

UTILITY CROSSINGS

ENGINEERING STANDARDS 2022

REVISIONS				
BY	DATE	ENGINEERING DIVISION	UTILITY CROSSINGS	
S.S.	1/19/12	CITY OF POMPANO BEACH		DATE: MAY 2022 DWG. NO. 514-1
		SCALE: N.T.S.		

Detail 514-2 — General Water Supply Notes

PROTECTION OF POTABLE WATER SUPPLY NOTES

A. GENERAL
IN ADDITION TO THESE REQUIREMENTS, ALL POTABLE WATER MAINS CONSTRUCTED IN THE VICINITY OF STORM SEWERS, SANITARY SEWERS OR FORCE MAINS SHALL COMPLY WITH THE APPLICABLE PROVISIONS OF FLORIDA ADMINISTRATIVE CODE CHAPTER 62-555, GREAT LAKES-UPPER MISSISSIPPI RIVER BOARD OF STATE SANITARY ENGINEERS (GLUMRB) "RECOMMENDED STANDARDS FOR WATER WORKS", AND GLUMRB "RECOMMENDED STANDARDS FOR WASTEWATER FACILITIES".

B. DEFINITIONS
FOR THE PURPOSES OF THIS SPECIFICATION, THE WORDS "OTHER PIPE" OR "OTHER PIPES" SHALL MEAN SANITARY SEWER MAIN, SEWAGE FORCE MAIN, STORMWATER MAIN OR ANY COMBINATION THEREOF.

C. CROSS CONNECTIONS PROHIBITED
THERE SHALL BE NO PHYSICAL CONNECTIONS BETWEEN A PUBLIC OR PRIVATE POTABLE WATER SUPPLY SYSTEM AND ANY OTHER PIPE OR APPURTENANCE THERETO WHICH WOULD PERMIT THE PASSAGE OF ANY WASTEWATER, POLLUTED WATER, OR ANY OTHER WATER INTO THE POTABLE SUPPLY. NO WATER PIPE SHALL PASS THROUGH OR COME INTO CONTACT WITH ANY PART OF A SANITARY SEWER MANHOLE OR STORMWATER MANHOLE.

D. RELATION OF OTHER PIPES TO POTABLE WATER MAINS

1. HORIZONTAL SEPARATION
A. NEW OR RELOCATED, UNDERGROUND WATER MAINS SHALL BE LAID TO PROVIDE A HORIZONTAL DISTANCE OF AT LEAST THREE FEET BETWEEN THE OUTSIDE OF THE WATER MAIN AND THE OUTSIDE OF ANY EXISTING OR PROPOSED STORM WATER, STORM WATER FORCE MAIN, OR PIPELINE CONVEYING REUSE WATER NOT REGULATED UNDER PART III OF CHAPTER 62-610,F.A.C.
B. NEW OR RELOCATED, UNDERGROUND WATER MAINS SHALL BE LAID TO PROVIDE A HORIZONTAL DISTANCE OF AT LEAST THREE FEET, AND PREFERABLY TEN FEET, BETWEEN THE OUTSIDE OF THE WATER MAIN AND THE OUTSIDE OF ANY EXISTING OR PROPOSED VACUUM TYPE SANITARY SEWER.
C. NEW OR RELOCATED, UNDERGROUND WATER MAINS SHALL BE LAID TO PROVIDE A HORIZONTAL DISTANCE OF AT LEAST SIX FEET, AND PREFERABLY TEN FEET, BETWEEN THE OUTSIDE OF THE WATER MAIN AND THE OUTSIDE OF ANY EXISTING OR PROPOSED GRAVITY-OR PRESSURE-TYPE SANITARY SEWER, WASTEWATER FORCE MAIN, OR PIPELINE CONVEYING REUSE WATER NOT REGULATED UNDER CHAPTER 62-610, F.A.C. THE MINIMUM HORIZONTAL SEPARATION DISTANCE BETWEEN WATER MAINS AND GRAVITY TYPE SEWERS SHALL BE REDUCED TO THREE FEET WHERE THE BOTTOM OF THE WATER IS LAID AT LEAST SIX INCHES ABOVE THE TOP OF THE SEWER.

ENGINEERING STANDARDS 2022

REVISIONS				
BY	DATE	ENGINEERING DIVISION	GENERAL WATER SUPPLY NOTES	
		CITY OF POMPANO BEACH		DATE: MAY 2022 DWG. NO. 514-2
		SCALE: N.T.S.		

Detail 514-3 — General Water Supply Notes

D. NEW OR RELOCATED, UNDERGROUND WATER MAINS SHALL BE LAID TO PROVIDE A HORIZONTAL DISTANCE OF AT LEAST TEN FEET BETWEEN THE OUTSIDE OF THE WATER MAIN AND ALL PARTS OF ANY EXISTING OR PROPOSED "ON-SITE SEWAGE TREATMENT AND DISPOSAL SYSTEM".

2. VERTICAL SEPARATION
A. NEW OR RELOCATED, UNDERGROUND WATER MAINS CROSSING ANY EXISTING OR PROPOSED GRAVITY-OR VACUUM-TYPE SANITARY SEWER OR STORM SEWER SHALL BE LAID SO THE OUTSIDE OF THE WATER MAIN IS AT LEAST SIX INCHES, AND PREFERABLY 12 INCHES, ABOVE OR AT LEAST 12 INCHES BELOW THE OUTSIDE OF THE OTHER PIPELINE. HOWEVER, IT IS PREFERABLE TO LAY THE WATER MAIN ABOVE THE OTHER PIPELINE.
B. NEW OR RELOCATED, UNDERGROUND WATER MAINS CROSSING ANY EXISTING OR PROPOSED PRESSURE-TYPE SANITARY SEWER, WASTEWATER OR STORM WATER FORCE MAIN, OR PIPELINE CONVEYING REUSE WATER SHALL BE LAID SO THE OUTSIDE OF THE WATER MAIN IS AT LEAST 12 INCHES, ABOVE OR BELOW THE OUTSIDE THE OTHER PIPELINE. HOWEVER, IT IS PREFERABLE TO LAY THE WATER MAIN ABOVE THE OTHER PIPELINE.
C. AT THE UTILITY CROSSINGS DESCRIBED IN PARAGRAPHS (A) AND (B) ABOVE, ONE FULL LENGTH OF WATER MAIN PIPE SHALL BE CENTERED ABOVE OR BELOW THE OTHER PIPELINE SO THE WATER MAIN JOINTS WILL BE AS FAR AS POSSIBLE FROM THE OTHER PIPELINE. ALTERNATIVELY, AT SUCH CROSSINGS, THE PIPES SHALL BE ARRANGED SO THAT ALL WATER MAIN JOINTS ARE AT LEAST THREE FEET FROM ALL JOINTS IN VACUUM-TYPE SANITARY SEWERS, STORM SEWERS, STORM WATER FORCE MAINS, OR PIPELINES CONVEYING REUSE WATER REGULATED UNDER PART III OF CHAPTER 62-610, F.A.C. AND AT LEAST SIX FEET FROM ALL JOINTS IN GRAVITY- OR PRESSURE-TYPE SANITARY SEWERS, WASTEWATER FORCE MAINS, OR PIPELINES CONVEYING REUSE WATER NOT REGULATED UNDER PART III OR CHAPTER 62-610, F.A.C.

WHERE THE HORIZONTAL CAN BEING LOCATED LESS THAT THE REQUIRED MINIMUM DISTANCES FROM JOINTS IN THE OTHER PIPELINE OR THE HORIZONTAL IS LESS THAT THREE FEET FROM ANOTHER PIPELINE OR THE UNDER GROUND WATER MAIN IS CROSSING ANOTHER PIPELINE AND IS LESS THAN THE REQUIRED MINIMUM VERTICAL DISTANCE FROM THE OTHER PIPELINE, THE CONTRACTOR SHALL CONTACT THE ENGINEER IMMEDIATELY FOR RECOMMENDED SOLUTIONS TO MEET THE FLORIDA OF DEPARTMENT OF ENVIRONMENTAL PROTECTION REQUIREMENTS PER CHAPTER 62-555, F.A.C.

PROTECTION OF POTABLE WATER SUPPLY NOTES

ENGINEERING STANDARDS 2022

REVISIONS				
BY	DATE	ENGINEERING DIVISION	GENERAL WATER SUPPLY NOTES	
		CITY OF POMPANO BEACH		DATE: MAY 2022 DWG. NO. 514-3
		SCALE: N.T.S.		

Detail 502-1 — Underground Valve Identification Marker

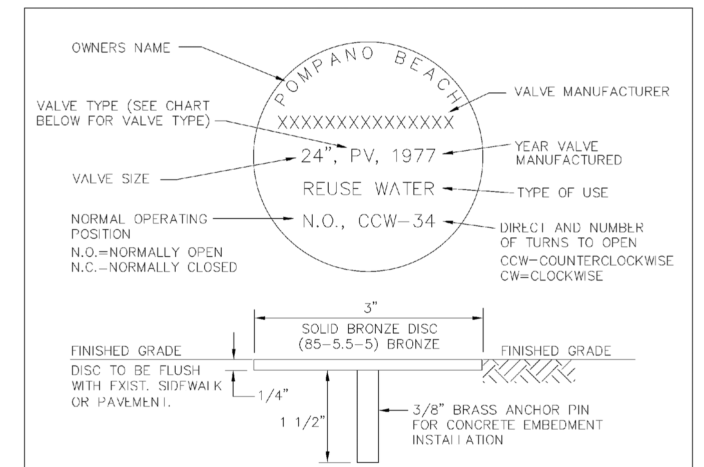

VALVE TYPES
BALL VALVE--BALLV
RESILIENT SEAT GATE VALVE--RSGV
RESILIENT WEDGE GATE VALVE--RWGV
BUTTERFLY VALVE--BV
PLUG VALVE--PV

NOTES:
1. VALVE INFORMATION TO BE ENGRAVED INTO TOP SURFACE WITH 1/4" CAPITAL LETTERS DOUBLE STAMPED.
2. ENTIRE MARKER TO BE COATED WITH CLEAR EPOXY TO PREVENT TARNISHING.
3. VALVE INFORMATION TO BE APPROVED BY CITY OF POMPANO BEACH UTILITIES DEPARTMENT.
4. MARKERS SHALL BE MANUFACTURED BY RG WRENCH OR APPROVED EQUAL.

UNDERGROUND VALVE IDENTIFICATION MARKER

ENGINEERING STANDARDS 2022

REVISIONS				
BY	DATE	ENGINEERING DIVISION	UNDERGROUND VALVE IDENTIFICATION MARKER	
S.S.	1/24/12	CITY OF POMPANO BEACH		DATE: MAY 2022 DWG. NO. 502-1
		SCALE: N.T.S.		

Detail 503-1 — Typical Utility Conflict

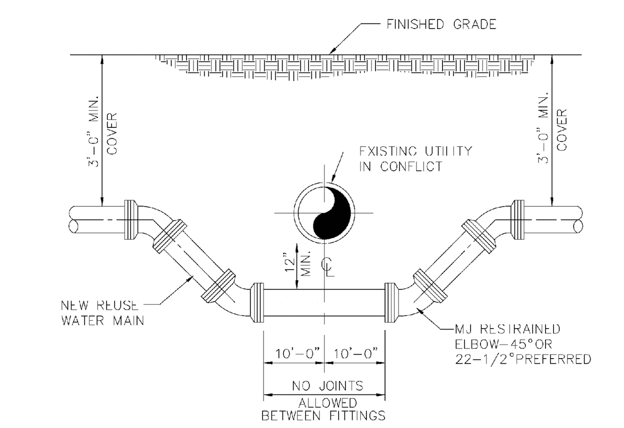

NOTES:
WHERE CONDITIONS PERMIT, PIPE DEFLECTION MAY BE USED INSTEAD OF BENDS TO OBTAIN THE MINIMUM CLEARANCE. FACTORY OFFSETS MAY BE USED ON 6" OR SMALLER MAINS AND LARGER MAINS ALSO.

TYPICAL UTILITY CONFLICT

ENGINEERING STANDARDS 2022

REVISIONS				
BY	DATE	ENGINEERING DIVISION	TYPICAL UTILITY CONFLICT	
S.S.	1/25/12	CITY OF POMPANO BEACH		DATE: MAY 2022 DWG. NO. 503-1
		SCALE: N.T.S.		

Detail 504-1 — Trench Backfill / Bedding

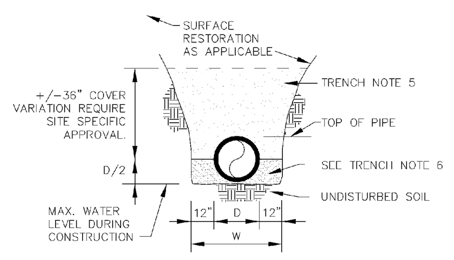

TRENCH BACKFILL / BEDDING CLASS " A "

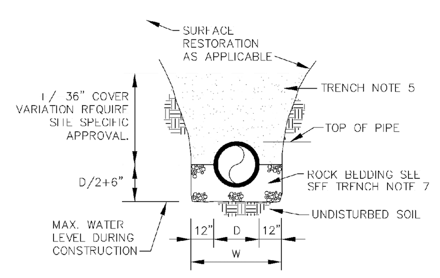

TRENCH BACKFILL / BEDDING CLASS " B "

ENGINEERING STANDARDS 2022

REVISIONS				
BY	DATE	ENGINEERING DIVISION	TRENCH BACKFILL / BEDDING	
		CITY OF POMPANO BEACH		DATE: MAY 2022 DWG. NO. 504-1
		SCALE: N.T.S.		

Detail 504-2 — Trench Backfill / Bedding

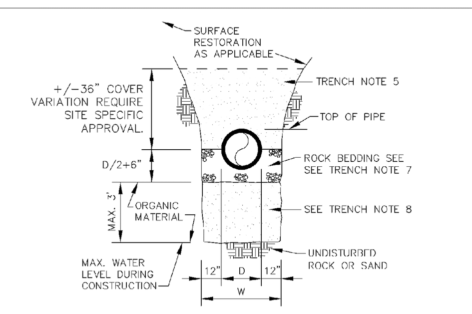

TRENCH BACKFILL / BEDDING CLASS " C "

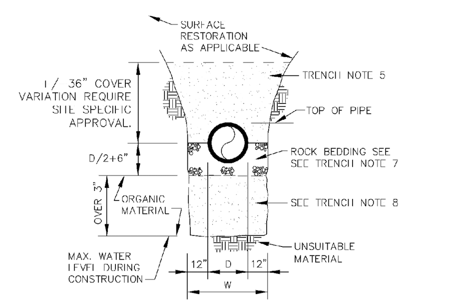

TRENCH BACKFILL / BEDDING CLASS " D "

ENGINEERING STANDARDS 2022

REVISIONS				
BY	DATE	ENGINEERING DIVISION	TRENCH BACKFILL / BEDDING	
		CITY OF POMPANO BEACH		DATE: MAY 2022 DWG. NO. 504-2
		SCALE: N.T.S.		

Detail 504-3 — Trench Backfill / Bedding

TRENCH BACKFILL / BEDDING NOTES

1. OUTLINE OF TRENCH EXCAVATION IS FOR ILLUSTRATIVE PURPOSES ONLY. ACTUAL TRENCH WIDTH AND SHAPE WILL VARY WITH SOIL CONDITIONS. TRENCH EXCAVATION SHALL BE IN ACCORDANCE WITH THE "FLORIDA TRENCH SAFETY ACT" AND OSHA TRENCH SAFETY STANDARDS.
2. TYPICAL TRENCH BACKFILL/BEDDING FOR REUSE WATER MAIN AND FORCE MAIN INSTALLATIONS SHALL BE CLASS "A" AS SHOWN IN DETAIL.
3. TYPICAL TRENCH BACKFILL/BEDDING FOR GRAVITY SEWER INSTALLATION SHALL BE CLASS "B" AS SHOWN IN DETAIL.
4. TRENCH BACKFILL/BEDDING CLASS "C" AND CLASS "D" SHALL BE USED FOR PIPE INSTALLATIONS WHERE UNSUITABLE TRENCH MATERIALS ARE ENCOUNTERED.
5. TRENCH ZONE BACKFILL SHALL BE MATERIAL TYPE 1 OR TYPES A THRU H, OR ANY MIXTURE THEREOF, WHERE SURFACE RESTORATION TYPE "1" IS APPLICABLE, TRENCH ZONE BACKFILL SHALL BE PLACED IN 12" LIFTS, COMPACTED TO 90% OF THE MATERIAL'S MAXIMUM DENSITY AS DETERMINED BY ASTM D-697 (AASHTO T-99). WHERE SURFACE RESTORATION TYPES "2", "3" AND "4" ARE APPLICABLE, TRENCH BACKFILL SHALL BE PLACED IN 8" LIFTS COMPACTED TO 98% OF THE MATERIAL'S DENSITY AS DETERMINED BY ASTM D-698 (AASHTO T-99).
6. BEDDING MATERIAL FOR TYPICAL REUSE WATER MAIN INSTALLATION SHALL BE TYPE C. BEDDING SHALL BE COMPACTED TO 95% OF THE MATERIAL'S MAXIMUM DENSITY AS DETERMINED BY ASTM D-1557 (AASHTO T-180).
7. BEDDING MATERIAL FOR TYPICAL GRAVITY SEWER INSTALLATION AND ANY INSTALLATION WHERE UNSUITABLE TRENCH BOTTOM CONDITIONS ARE FOUND SHALL BE TYPE E. BEDDING SHALL BE PLACED IN LIFTS NOT TO EXCEED 6" AND COMPACTED TO 95% OF THE MATERIAL'S MAXIMUM DENSITY AS DETERMINED BY ASTM D 1557 (AASHTO T 180).
8. UNSUITABLE MATERIAL SHALL BE REMOVED TO UNDISTURBED ROCK OR SAND OR TO DEPTH AS SPECIFIED BY ENGINEER. BACKFILL MATERIAL SHALL BE TYPE C. BACKFILL SHALL BE PLACED IN 8" LIFTS COMPACTED TO 95% OF THE MATERIAL'S MAXIMUM DENSITY AS DETERMINED BY ASTM D-1557 AASHTO T-180).

ENGINEERING STANDARDS 2022

REVISIONS				
BY	DATE	ENGINEERING DIVISION	TRENCH BACKFILL / BEDDING	
		CITY OF POMPANO BEACH		DATE: MAY 2022 DWG. NO. 504-3
		SCALE: N.T.S.		

Detail 504-4 — Trench Backfill / Bedding

9. BEDDING TYPES – THE FOLLOWING TYPES OF SUITABLE MATERIALS ARE DESIGNATED AND DEFINED AS FOLLOWING:

TYPE A: CRUSHED LIMEROCK OR SAND WITH 100 PERCENT PASSING A 1 INCH SIEVE AND A SAND EQUIVALENT VALUE NOT LESS THAN 50.

TYPE B: CRUSHED LIMEROCK OR SAND WITH 100 PERCENT PASSING A 1/2 INCH SIEVE AND A SAND EQUIVALENT VALUE NOT LESS THAN 50.

TYPE C: SAND WITH 100 PERCENT PASSING A 3/8 INCH SIEVE, AT LEAST 90 PERCENT PASSING A NUMBER 4 SIEVE, AND A SAND EQUIVALENT VALUE NOT LESS THAN 30.

TYPE D: CRUSHED LIMEROCK WITH 100 PERCENT PASSING A 1 INCH SIEVE AND NOT MORE THAN 10 PERCENT A NUMBER 4 SIEVE.

TYPE E: CRUSHED LIMEROCK OR SAND WITH 100 PERCENT PASSING A 3/4 INCH SIEVE AND NOT MORE THAN 10 PERCENT PASSING A NUMBER 4 SIEVE.

TYPE F: CRUSHED LIMEROCK MEETING THE FOLLOWING GRADATION REQUIREMENTS.

SIEVE SIZE	PERCENTAGE PASSING
2 INCH	100
1-1/2 INCH	90-100
1 INCH	20-55
3/4 INCH	0-15
NO. 200	0-3

TRENCH BACKFILL / BEDDING NOTES

ENGINEERING STANDARDS 2022

REVISIONS				
BY	DATE	ENGINEERING DIVISION	TRENCH BACKFILL / BEDDING	
		CITY OF POMPANO BEACH		DATE: MAY 2022 DWG. NO. 504-4
		SCALE: N.T.S.		

Detail 505-1 — Surface Restoration

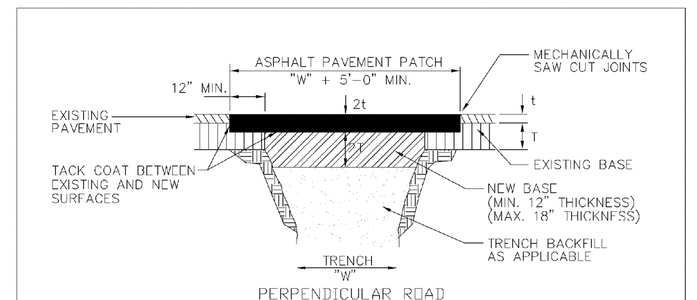

PERPENDICULAR ROAD CROSSINGS (TYPE III)

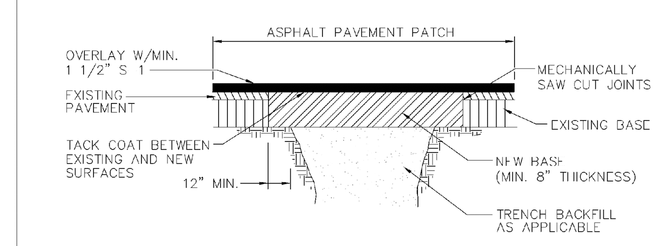

STANDARD PARALLEL ROAD RESTORATION (TYPE IV)

SURFACE RESTORATION

ENGINEERING STANDARDS 2022

REVISIONS				
BY	DATE	ENGINEERING DIVISION	SURFACE RESTORATION	
		CITY OF POMPANO BEACH		DATE: MAY 2022 DWG. NO. 505-1
		SCALE: N.T.S.		

Detail 500-1 — Valve Box Settings

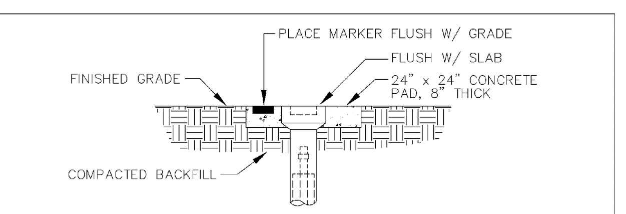

UNPAVED AREAS

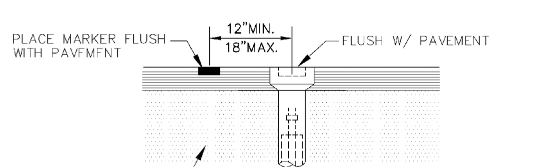

PAVED AREAS

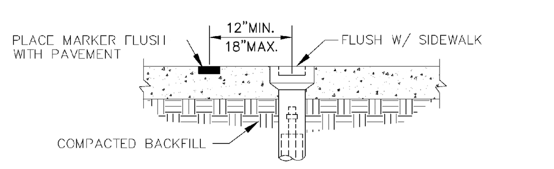

ON SIDEWALKS

NOTE: ALL LIDS MUST SAY "REUSE WATER"

VALVE BOX SETTINGS

ENGINEERING STANDARDS 2022

REVISIONS				
BY	DATE	ENGINEERING DIVISION	VALVE BOX SETTINGS	
		CITY OF POMPANO BEACH		DATE: MAY 2022 DWG. NO. 500-1
		SCALE: N.T.S.		

Detail 510-1 — Meter Box Location

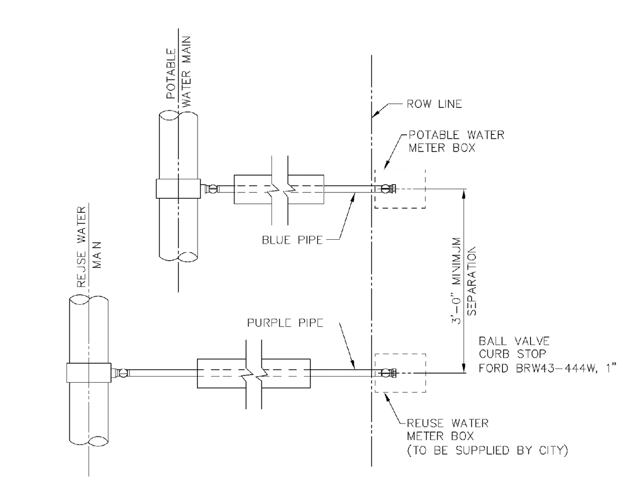

METER BOX LOCATION

ENGINEERING STANDARDS 2022

REVISIONS				
BY	DATE	ENGINEERING DIVISION	METER BOX LOCATION	
		CITY OF POMPANO BEACH		DATE: MAY 2022 DWG. NO. 510-1
		SCALE: N.T.S.		

Detail 510-2 — Reuse Meter Box Cover

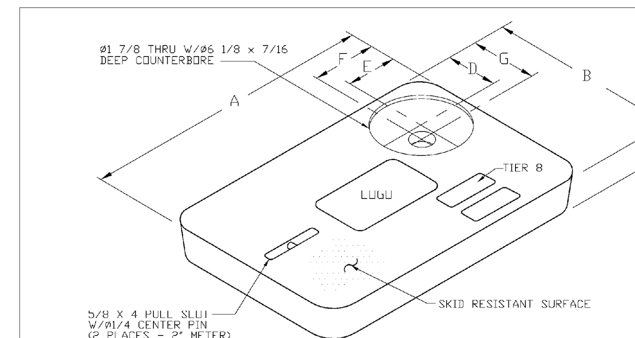

METER BOX COVER DIMENSIONS (IN)							
METER SIZE	A	B	C	D	E	F	G
1"	18 1/8"	11 1/4"	1 3/4"	3 3/4"	4"	4 9/16"	4 5/16"
1 1/2"	23 1/4"	13 3/4"	2"	4"	4"	4 9/16"	4 9/16"
2"	30 1/2"	17 1/2"	2"	4"	4"	4 9/16"	4 9/16"

NOTES
1. CUSTOMER IS CITY OF POMPANO BEACH FLORIDA LOGO TO BE SPECIFIED: REUSE WATER
DO NOT DRINK
NO BEBER
2. FITS NEPTUNE R450 RADIO READ
3. THIS COVER IS RATED FOR A STATIC DESIGN LOAD OF 8,000 LBS. (35,548 N) OVER A 10 (254) X 10 (254) AREA AND MUST PASS A MINIMUM STATIC TEST LOAD OF 12,000 LBS (53,376 N).
4. COVER COLOR IS PURPLE, PANTONE 522C
5. NON - SKID TEXTURED SURFACE LID
6. METER BOX COVER SHOULD BE RATED FOR TRAFFIC CONDITION AS DETERMINED BE ENGINEER OF RECORD.

TYPICAL METER BOX COVER

ENGINEERING STANDARDS 2022

REVISIONS				
BY	DATE	ENGINEERING DIVISION	REUSE METER BOX COVER	
S.S.	12-2012	CITY OF POMPANO BEACH		DATE FEB. 2022 DWG. NO. 510-2
S.S.	11-2018	SCALE: N.T.S.		

Detail 510-3 — Reuse Meter Box

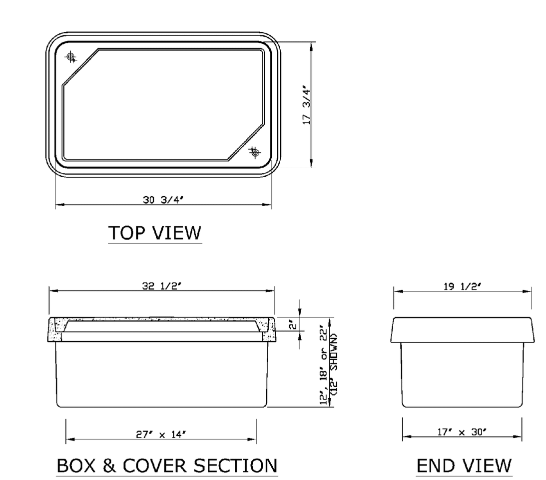

NOTES
1. MATERIAL: FIBERGLASS REINFORCED POLYMER CONCRETE AND FIBERGLASS REINFORCED POLYMER.
2. COVER, COLLAR AND BOX ARE COLOR PURPLE, PANTONE 522C
3. FLARED WALL BOXES ARE NESTABLE
4. NON - SKID TEXTURED SURFACE LID

(1") 11 x 18 METER STRAIGHT WALL BOX
(1 1/2") 13 x 24 METER STRAIGHT WALL BOX
(2") 17 x 30 METER STRAIGHT WALL BOX

ENGINEERING STANDARDS 2022

REVISIONS				
BY	DATE	ENGINEERING DIVISION	REUSE METER BOX	
S.S.	11-2018	CITY OF POMPANO BEACH		DATE MAY 2022 DWG. NO. 510-3
		SCALE: N.T.S.		

Stephen Botek
Digitally signed by Stephen Botek
Date: 2024.04.04 09:02:43 -04'00'

BTE REF DATE: 00.00.00

#	DATE	REVISIONS

NATHAN M. LEWIS
LICENSE
No. 86481
STATE OF FLORIDA
PROFESSIONAL ENGINEER
April 4, 2024

THIS DOCUMENT HAS BEEN DIGITALLY SIGNED AND SEALED BY NATHAN M. LEWIS, P.E. ON THE DATE ADJACENT TO THE SEAL.

PRINTED COPIES OF THIS DOCUMENT ARE NOT CONSIDERED SIGNED AND SEALED AND THE SIGNATURE MUST BE VERIFIED ON ANY ELECTRONIC COPIES.

2006 2021 Celebrating 15 Years

WATER AND SANITARY SEWER DETAILS

580 BRINY
580 Briny Ave
Pompano Beach, FL 33062

Botek Thurlow Engineering, Inc.
3409 NW 9th Avenue, Suite 1102, Ft. Lauderdale, FL 33309
www.botekthurlow-eng.com p: 954-568-0888 f: 954-568-0757

BTE PROJECT #: 22-0804

PROJECT DATE: 10-23-22

SHEET #: C-2.4

DRC
PZ24-12000003
05/15/2024